# ANDREWS PRODUCTS, INC.

**431 Kingston Ct.**
**Mt. Prospect, IL USA 60056**
**847-759-0190 (phone)**
**847-759-0848 (fax)**

## EVOLUTION ENGINE CAM INSTALLTION INSTRUCTIONS

**Important Notes:**

A. EV engines with stock electronic ignition systems automatically adjust ignition spark advance so that engines cannot rev beyond approximately 5200 RPM. To reach higher engine RPMs, either an H/D Eagle ignition module or Sportster ignition module can be installed. These modules also retain the vacuum ignition advance system which is well worth having on any street bike.

B. Camshafts for Shovel engines should not be used in EV80 engines. The two engines have different lifter block tappet angles. Valve timing for Shovel cams installed EV80 engines will not be correct resulting in poor engine performance, possible piston/valve and valve/valve interference.

---

1. Andrews cam grinds, EV1, EV13, EV23, EV27, EV31, EV3, EV38 and EV46 are made with stock size base circles so stock pushrods will be the correct length. Installing higher lift cams will require adjustable pushrods or longer fixed length pushrods to accommodate cams with smaller than stock base circles (EV5, EV51, EV57, EV59, EV7, EV72, EV79 or bigger cams).

2. Remove fuel tanks and engine rocker box top covers. Each rocker arm must be removed in order to remove the pushrods. If you will be reinstalling the stock pushrods, mark them so they can be replaced into their original locations. Not all stock pushrods are the same length.

3. Remove ignition cover and stock cam. Measure installed length of stock cam and new cam. Cams for 1984-'87 engines should measure 3.025 inches from front face of gear to thrust shoulder surface. Cams for ’88 and later EV engines need to be shimmed to 3.075 (+.050 longer) because of a factory design change in the length of all '88 and later camshafts. Proper end play for installed camshafts is .010 /.015 inches. EV engines use the same shims as shovels. Spacer shims are listed in EV-80 parts books and are available from H/D dealers.

4. To make sure that your new camshaft drive gear will operate quietly, the cam gear to pinion backlash must be correctly set up. Proper backlash is .0000/.0005 for a cold engine. Andrews Products recommends that BOTH the new gear and the original gear be measured as described on the last page of these instructions. If both gears measure within .0005" of the same size, it should NOT be necessary to change gears. If a different size gear is required, Andrews Products has them. Excess backlash will cause gear noise which sounds like loose lifters but will not hurt anything. Insufficient backlash will cause a distinct gear whine and should be corrected since gear tooth damage will result over a short time period.

5. Install new cam, then replace gear cover and ignition parts. When reinstalling rocker arms and adjustable pushrods, the engine should be positioned to TDC (first on front cylinder, then rear) with the intake and exhaust lobes at minimum lift (both valves closed). Engine will now be at the top of the compression stroke for that cylinder (where both pushrods can be adjusted correctly).

6. Now tighten the rocker arm screws evenly until they are firmly seated. If the valve unseats during this sequence, wait 10/15 minutes until the lifter bleeds down before tightening the other rocker arm. Following this procedure will eliminate any chance of valve/valve interference during installation. Andrews Products makes adjustable aluminum pushrods and adjustable chrome moly steel pushrods. Adjustable pushrods will simplify this installation.

7. Adjustable aluminum and steel pushrods are made in sets with 1 long (front exhaust), 1 intermediate (rear exhaust) and 2 short (intakes) rods. To install, adjust pushrod to its' shortest length, then position in the engine with rocker installed. Now lengthen pushrod until all free play is gone. Then adjust pushrod 4-4.5 full turns longer (24-27 flats) and tighten locknut. Wait until hydraulic unit bleeds down and repeat procedure on next pushrod. Pushrod kit part numbers are 292110 for aluminum rods and 292140 for chrome moly steel rods.

8. New EV hydraulic lifters are capable of 6000+ RPM without floating. We are recommending that solid lifters not be used with any of these cams. Also, EV1, EV13, EV23, EV27, EV31, EV3, EV38 and EV46 cams will bolt in without head work. EV35, EV5 and EV51 cams need .560 as minimum valve travel. EV57, EV59, EV7, EV72, EV79 cams need .590 minimum valve travel. Andrews Products titanium upper spring collars are light, strong and will add .050 travel to stock valve springs. With high lift titanium collars, EV5, EV51, EV57, EV59, EV7 and EV72 cams will be much easier to install. Titanium collars are Part# 293110, (includes 4 pcs).

9. Final tuning of carburetors with bigger cams sometimes requires richer jetting. For stock H/D Keihin butterfly carbs #60 slow jets and #165 main jets work well. CV carbs (’89 and later) use slow jets #48 to #50 and 195 main jets. For 1988 and earlier Keihin carbs, an Andrews Products High Flow Accelerator Pump kit will also improve low speed and mid range throttle response. (Part# 269050).

10. All EV23, EV27, EV31, EV3, EV46, EV35, EV5, EV51, EV57, EV59, EV7, EV72, EV79 and EV9 installations <u>may require relieving of the engine case bearing boss</u> to create clearance for the rear intake cam lobe tip. (This is the lobe furthest away from the gear). Clearance can be checked by temporarily removing lifters, installing outer cam cover and SLOWLY rotating engine. If interference is felt or if the rear intake cam lobe tip appears to be touching the engine bearing boss, remove small amounts of aluminum from the bearing boss to relieve the interference. <u>Don't ignore this step!</u>

11. HI-LIFT cams (EV81, EV84, EV88) are intended for highly modified engines and require expert knowledge and experience. Machining of cases is required for these cams also.

NOTE - ENGINES (1990-up): Stock 1990-up H/D cam drive gears have 2 grooves on gear face while 1977-89 gears have only one. All Andrews Products drive gears have 1 groove on cam gear.

Service manuals for 1990 and later engines show different gear tooth measurements for 1990 and later camshaft drive gears than for camshaft drive gears for earlier years. Andrews Products standard size cam gears will be correct for most 1990 and later engines. For a small number of engines having cam gears color coded green or black, an oversize Andrews cam gear (part# 212077) may be needed.

There are 2 basic differences relating to 1990 and later cam gear sizes:

A. The size range of gears from the largest to the smallest has been reduced from .006" to .003". The largest gears are the same size for '77-'89 and 1990-up (green and black color codes).

B. For 1990-up, gear sizes have been listed for .108" pins instead of .105" pins. Measurements with .108" pins are approximately .011" larger than with .105" pins (for the same gear).

EVOLUTION CAM TIMING SPECIFICATIONS

| GRIND | TIMING | DURATION | LIFT | SPRINGS | VALVE LIFT (TDC) | SPRING TRAVEL (MIN) |
|---|---|---|---|---|---|---|
| Stock | -06/38 | 212 | .472 | STOCK | .062 | STOCK |
| 84-87 | 25/-03 | 202 | .472 | - | .078 | STOCK |
| Stock | 01/37 | 218 | .495 | STOCK | .091 | STOCK |
| 88-91 | 53/-01 | 232 | .495 | - | .083 | STOCK |
| Stock | -02/30 | 208 | .472 | STOCK | .070 | STOCK |
| 92-94 | 31/-09 | 202 | .472 | - | .049 | STOCK |
| EV1 | 12/34 | 226 | .485 | STOCK | .143 | .540 |
| | 34/12 | 226 | .485 | - | .143 | .540 |
| EV23 | 10/30 | 220 | .498 | STOCK | .134 | .540 |
| | 40/08 | 228 | .498 | - | .121 | .540 |
| EV13 | 15/31 | 226 | .498 | STOCK | .161 | .540 |
| | 45/13 | 238 | .498 | - | .148 | .540 |
| EV27 | 20/36 | 236 | .495 | STOCK | .182 | .540 |
| | 46/14 | 240 | .495 | - | .166 | .540 |
| EV31 | 10/46 | 236 | .495 | STOCK | .133 | .540 |
| | 52/08 | 240 | .495 | - | .122 | .540 |
| EV3 | 21/37 | 238 | .495 | STOCK | .190 | .540 |
| | 43/15 | 238 | .495 | - | .163 | .540 |
| EV46 | 25/41 | 246 | .495 | STOCK | .205 | .540 |
| | 49/17 | 246 | .495 | - | .168 | .540 |
| EV35 | 21/37 | 238 | .495 | ANDREWS | .190 | .560 |
| (1) | 52/20 | 252 | .530 | - | .190 | .580 |
| EV38 | 21/37 | 238 | .495 | ANDREWS | .190 | .560 |
| (1) | 52/20 | 252 | .500 | - | .182 | .560 |
| EV51 | 28/44 | 252 | .510 | ANDREWS | .233 | .560 |
| | 54/22 | 256 | .510 | - | .195 | .560 |
| EV5 | 28/44 | 252 | .530 | ANDREWS | .240 | .580 |
| | 52/20 | 252 | .530 | - | .190 | .580 |
| EV57 | 26/46 | 252 | .530 | ANDREWS | .227 | .590 |
| | 59/27 | 266 | .560 | - | .223 | .610 |
| EV59 | 28/48 | 256 | .560 | ANDREWS | .236 | .610 |
| | 56/24 | 260 | .560 | - | .208 | .610 |
| EV7 | 31/55 | 266 | .560 | ANDREWS | .249 | .610 |
| | 59/27 | 266 | .560 | - | .223 | .610 |
| EV72 | 30/54 | 264 | .560 | ANDREWS | .246 | .610 |
| | 60/28 | 268 | .560 | - | .230 | .610 |
| EV79 | 31/55 | 266 | .560 | ANDREWS | .249 | .610 |
| | 64/32 | 276 | .550 | - | .250 | .610 |

(1) *EV35 and EV38 cams differ only in the maximum exhaust cam lift.*

EVOLUTION CAM TIMING SPECIFICATIONS

| GRIND | TIMING | DURATION (.053) | DURATION (.020) | LIFT | SPRINGS | VALVE LIFT (TDC) | SPRING TRAVEL (MINIMUM) |
|---|---|---|---|---|---|---|---|
| EV9 | 36/60 | 276 | | .550 | ANDREWS | .274 | .590 |
| | 64/32 | 276 | | .550 | - | .250 | .590 |
| EV81 | 32/60 | 272 | 306 | .610 | HI-LIFT | .262 | .650 |
| | 66/30 | 276 | 310 | .610 | 160 LBS | .244 | .650 |
| EV84 | 32/64 | 276 | 310 | .640 | HI-LIFT | .269 | .690 |
| | 70/30 | 280 | 314 | .640 | 160 LBS | .246 | .690 |
| EV88 | 34/70 | 284 | 318 | .680 | HI-LIFT | .288 | .730 |
| | 76/32 | 288 | 322 | .680 | 160 LBS | .264 | .730 |

| COLOR CODE | PINION PART NO(1) | PINION .SIZE(2) | CAM GEAR PART NO. | CAM GEAR SIZE(2) | ANDREWS SIZES |
|---|---|---|---|---|---|
| Orange | 24040-78 | 1.4853-1.4850 | 24040-93 | 2.7472-2.7476 | 2.7455-2.7465 Small size |
| White | 24041-78 | 1.4849-1.4846 | 24041-93 | 2.7477-2.7481 | - |
| Yellow | 24042-78 | 1.4845-1.4842 | 24042-93 | 2.7482-2.7486 | - |
| Red | 24043-78 | 1.4841-1.4838 | 24043-93 | 2.7487-2.7491 | 2.7485-2.7491 Standard size |
| Blue | 24044-78 | 1.4837-1.4834 | 24044-93 | 2.7492-2.7496 | - |
| Green | 24045-78 | 1.4833-1.4830 | 24045-93 | 2.7497-2.7501 | - |
| Black | 24046-78 | 1.4829-1.4826 | 24046-93 | 2.7502-2.7506 | 2.7495-2.7505 Large size |

(1) Old part number listed for reference.
(2) All sizes listed for measurements with .108" gage pins.

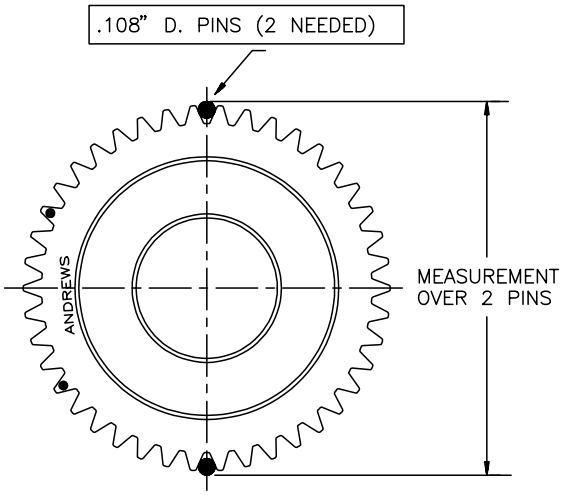


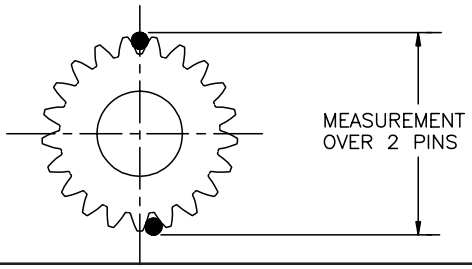


If you need to compare relative sizes of cam or pinion gears for purposes of proper gear pitch sizing, the above table may be helpful. **For quiet operation, new cam or pinion gear pitch measurements should be identical or +.0005 LARGER than old parts.** (Assuming that old parts were operating without excess noise).